Cameron Carbon INCORPORATED

Activated Carbon
& Related Technology

P.O. Box 995 Havre de Grace MD 21078 USA
Toll Free: (800) 394-6844
Tel: +1 (410) 942-0240 • Fax: +1 (410) 942-0242
www.cameroncarbon.com • sales@cameroncarbon.com

Vapor Phase Units
VC400LP-1000 VC600LP-1500 VC800LP-2000

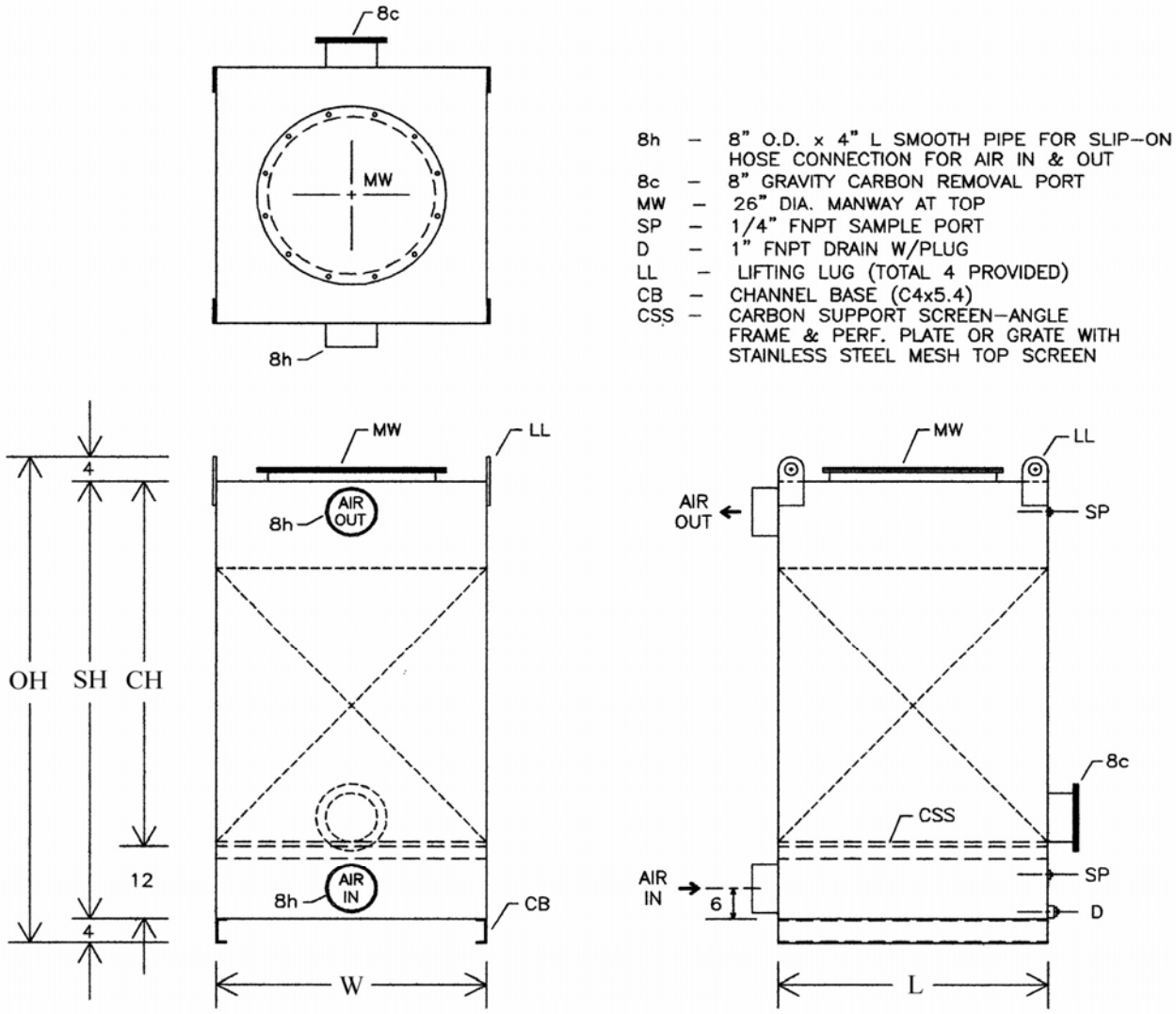

** Shown with 8" standard air connections; size 6" & 10" optional

This information has been gathered from standard reference materials and/or test procedures and is believed to be true and accurate. It is offered solely for your consideration and verification. None of the information presented shall be construed as constituting a warranty or representation, expressed, written, or implied, for which we assume legal responsibility or that the information or goods described is fit for any particular use either alone or in combination with other goods or processes, or that its use does not conflict with existing patent rights. No license is granted to infringe on any patent rights or practice any patent invention.